CASE FINISH	CURRENT (AMPS)	WORKING VOLTAGE				MAXIMUM DC RESISTANCE (OHMS)	MAXIMUM VOLTAGE DROP		MINIMUM CAPACITANCE (uF)	MIN. INSERTION LOSS PER MIL-STD-220, FULL LOAD, +25°C												
		-55°C TO +85°C		-55°C TO +125°C																		
		AC	DC	AC	DC		DC	AC		14 KHz	30 KHz	50 KHz	75 KHz	100 KHz	150 KHz	300 KHz	500 KHz	1 MHz	10 MHz	100 MHz	1 GHz	10 GHz
SILVER	15	125 (400HZ)	350	125 (400 HZ)	300	0.005	0.075	---	0.015±20%	--	--	--	--	--	--	--	--	6	25	42	50	--

PART MARKING:

SCIF007
DATE CODE

PACKAGE MARKING:

BUBBLE PACK:
SCI 51F-717-007
DATE CODE
QTY.

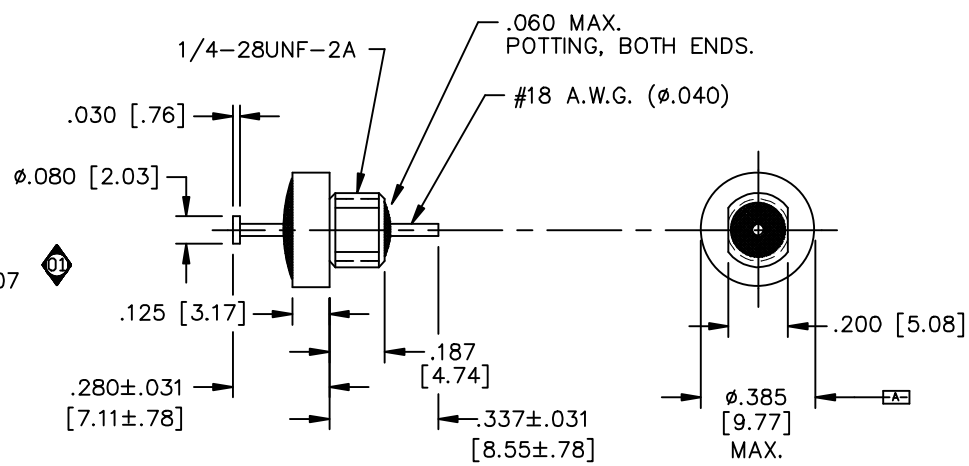

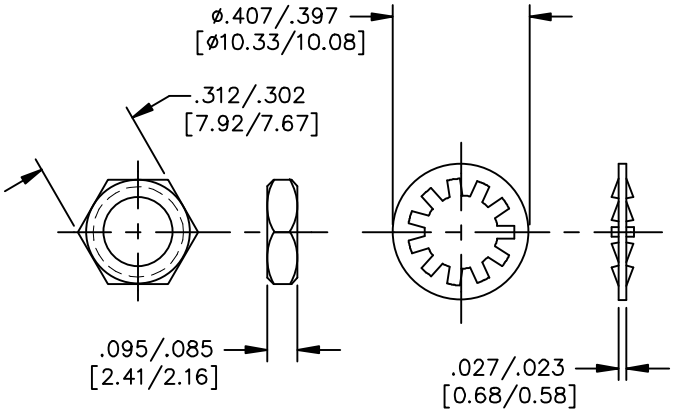

MTG. HARDWARE

MARKING NOTES:

N/A

SCHEMATIC

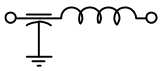

NOTES:

1) MOUNTING TORQUE NOT TO EXCEED 7in-lbs.
2) HARDWARE IS INCLUDED.
3) THIS IS A LEAD FREE PRODUCT.
4) MAX REFLOW IS 245°C FOR 5 SECONDS.

RoHS COMPLIANT

REV. NO.	CHANGE NOTICE
00	CN 32802-CPD
01	CN 37968-ENG

UNLESS OTHERWISE SPECIFIED DIMENSIONS ARE IN INCHES. [MILLIMETERS]

DO NOT SCALE.

TOLERANCES UNLESS OTHERWISE SPECIFIED
Fractions ±
Dec. .xx±
Dec. .xxx± .010
Angles ±0° 30'

CODE IDENT. NO. OLSP2

SPECTRUM CONTROL INC.

ERIE, FAIRVIEW PENNSYLVANIA

Dwn. SLAGLE
Date 10-16-07
Engr. SACKETT
Sheet 1 of 1

Description Low Pass EMI Filter

51F-717-007

Quality Products From The Specialists In Electro-Magnetic Compatibility